Fabricator EM401i, Fabricator EM501i

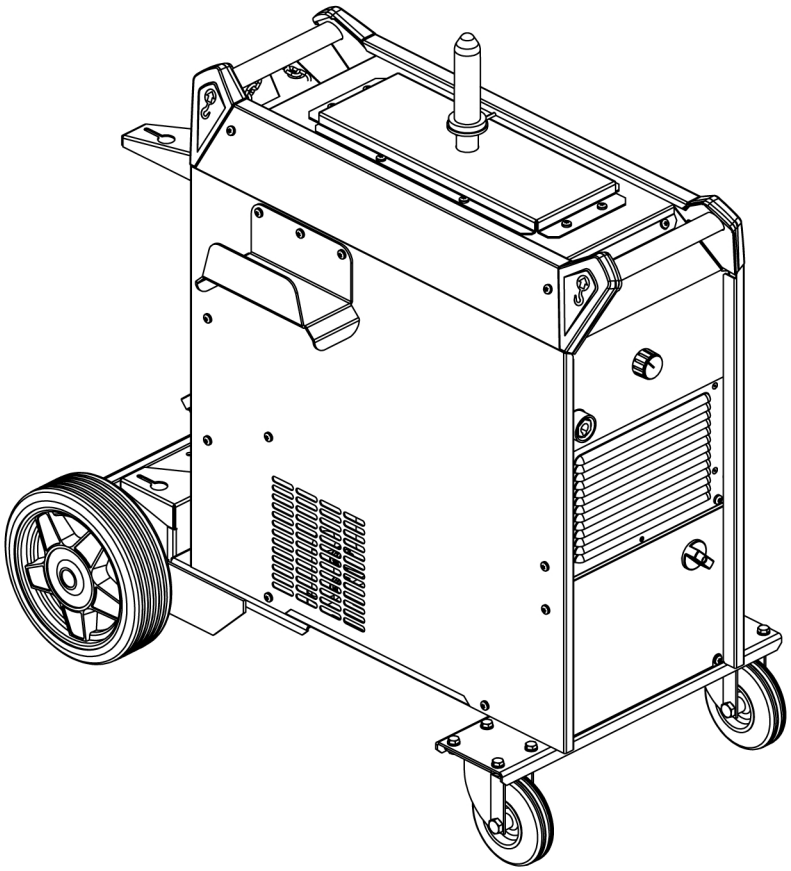

Spare parts list

Valid for: Serial number: OP110-, OP210YYXXXXXX

0463 810 001 GB 20260930

Ordering no.	Product	Serial no.	Notes
0446 400 882	Fabricator EM501i with cooling unit	OP110YYXXXXXX	CE
0446 400 883	Fabricator EM401i with cooling unit	OP110YYXXXXXX	CE
0446 400 884	Fabricator EM401i	OP110YYXXXXXX	CE

Spare parts may be ordered through your nearest ESAB dealer, see **esab.com**. When ordering, please state product type, serial number, denominations and ordering numbers according to the spare parts list. This facilitates dispatch and ensures correct delivery.

Maintenance and repair work should be performed by an experienced person, and electrical work only by a trained electrician. Use only recommended spare parts.

1 SPARE PARTS **4**

1.1 Complete welding power source **4**

1.2 Power module **7**

1.3 Cooling unit module **13**

1.4 Cooling unit housing **16**

 © ESAB AB 2026

1 SPARE PARTS

1.1 Complete welding power source

Item	Qty	Ordering no.	Denomination	Notes	Component designation
1	1		Power block, Fabricator 501i	See *"Power module"*, page 7.	
2	1	0446 431 880	Side Panel Left		
3	1	0446 431 881	Side Panel Right		
4	1	0446 432 880	Top panel		
5	1	0321 475 893	Knob	D36-1/4IN	
6	2	0465 293 001	Handle corner part		
7	2	0465 293 002	Handle corner part, Mirrored		
8	1	0469 950 880	Cable inlet		
9	2	0465 200 001	Handle complete		
10	1	0446 433 880	Input power cable		
11			Screw MRT	M6×16 black	
12			Screw Rx-PT	8-16×20	
14	1		Cooling unit	See *"Cooling unit module"*, page 13.	
15			Rivet	D4.8×10 dome head	
16	1	0446 604 880	Cylinder shelf assembly		
17	1	0446 429 001	Bottom cylinder guide plate		
18	1	0446 430 001	Top cylinder guide plate		
19	2	0446 605 880	Cable holding plate		
20	1	0446 421 880	Wire feeder plate assembly		
21	1	0446 419 880	Front wheel plate		
22	2		Wheel	See item 101 in *"SPARE PART KIT"*, page 5.	
23	2	0349 304 853	Link wheel		
24	2	0321 173 001	Cylinder straps		
25	8		Hexagon screw	M8×16	
26	8		Hexagon nut with flange	M8	
27	2		Washer	See item 101 in *"SPARE PART KIT"*, page 5.	
28	2		Grip ring	See item 101 in *"SPARE PART KIT"*, page 5.	
29	1	0278 300 401	Insulating bushing		
30	1		Pin		

 © ESAB AB 2026

Item	Qty	Ordering no.	Denomination	Notes	Component designation
31	1	0162 411 001	Washer		
32	1	0194 034 003	Ferrite ring core		
33	1	0465 501 001	Protective cover		
34	1		Washer lock AZ	6.4×11	
35	2		Washer BRB	D12/6.4×1.5	
36	1		Screw MRT	M6×16	
37	8		Washer BRB	D16/8.4	
38	1	0447 380 880	Precharge circuit kit		
39	1	0447 259 001	Mounting bracket		
40	1	0447 379 880	DC bus cable		
41	4		Spacer		
42	2		Screw MRT-Combi	M5×10	
43	1	0447 261 001	Nomex	0.18	
44	1	0447 377 881	Supply cable harness	Only for EM401i	

SPARE PART KIT

Item	Qty	Ordering no.	Denomination	Notes	Package includes
101	1	0447 043 880	Wheel kit		• Wheel, item 22 (Qty. 1) • Washer , item 27 (Qty. 1) • Grip ring, item 28 (Qty. 1)

 © ESAB AB 2026

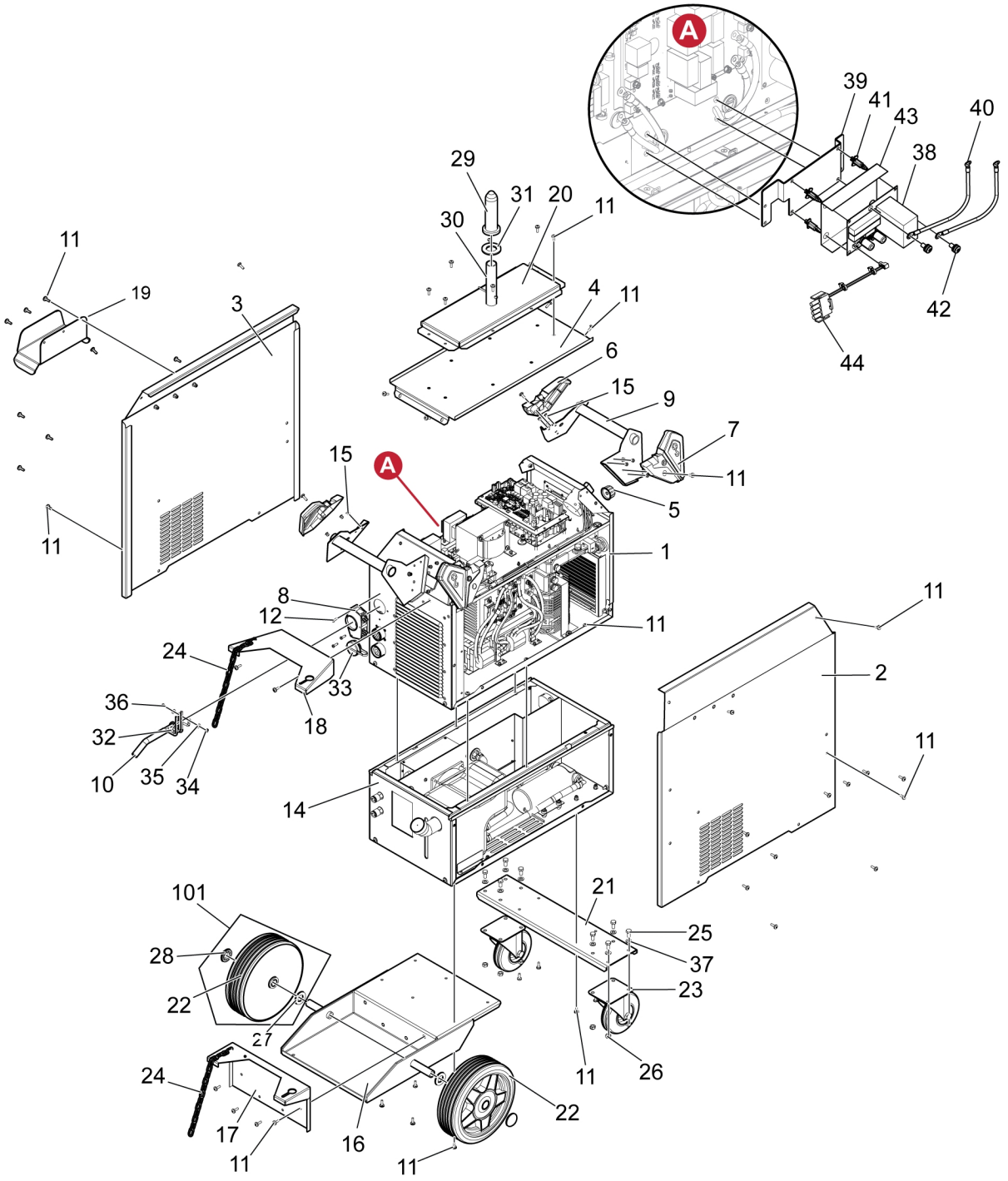
A
39
41
43
40
38
42
44
29
31
20
11
30
11
19
3
4
11
6
15
9
7
11
5
15
A
1
11
8
12
11
11
24
2
33
36
18
32
11
10
35
34
14
101
21
25
28
37
22
23
27
24
11
26
22
17
16
11
11

 © ESAB AB 2026

1.2 Power module

Item	Qty	Ordering no.	Denomination	Notes	Component designation
1	1	0700 501 018	Display board		1AP1
2	1	0700 501 019	Front overlay	Only for EM401i with cooling unit/401i	
	1	0700 501 020		Only for EM501i with cooling unit	
3	1	A000 101 478	Switch kit		2QF1
3a	1	0465 354 002	Knob for main switch		
4	1	0700 501 022	Control board U2		20AP2
5	1	0700 501 023	Control board U3	Only for EM401i with cooling unit/401i	20AP1
	1	0700 501 031		Only for EM501i with cooling unit	
6	1	0700 501 024	Capacitor board		15AP3
7	1	0700 501 025	Input EMC board		2AP1
8	3	0700 020 018	Output snubber board		2AP3,2AP4, 2AP5
9	1	0700 020 019	Fan power supply board		15AP2
10	1	0700 501 021	Output EMC board		2AP2
11	1		Main Power board with IGBT's and Input Rectifier module combined	Only for EM401i with cooling unit/401i, refer item 201	15AP1
				Only for EM501i with cooling unit, refer item 201	15AP1
12	2	0700 020 076	Transformer	Only for EM401i with cooling unit/401i	15T1
	2	0700 020 022		Only for EM501i with cooling unit	15T1
13	1	0700 020 080	Inductor	Only for EM401i with cooling unit/401i	15L1
	1	0700 020 023		Only for EM501i with cooling unit	15L1
14	1	0700 501 026	Input harmonic inductor		2L2
15	1	0700 501 027	Auxiliary transformer	510 VA	2T3
16	1	0700 020 025	Auxiliary transformer	34 VA	2T2
17	3		Secondary rectifier diode	400 V/2×200 A, refer to item 202	15PM1, 15PM2, 15PM3
18	1		Input rectifier	1600 V/100 A, refer to item 203	15BR1
19	1	0700 020 028	Secondary current sensor		15CS1

 © ESAB AB 2026

Item	Qty	Ordering no.	Denomination	Notes	Component designation
20	1	0700 020 030	Fan (48 V DC / 120×120×38 mm)	Only for EM401i with cooling unit	15EV1
	2			Only for EM501i with cooling unit	15EV1, 15EV2
21	2	0160 362 881	OKC output terminals		
22	1		Connector 19 pin assy with harness		XS1
23	1	0700 020 034	Protective cover		
24	1	0700 501 028	Input mains terminal block		
25	1	0700 501 029	Fixing bracket (for item 24)		
26	1	0700 501 030	Output positive bus bar 01	Only for EM401i with cooling unit	
	1	0700 020 045		Only for EM501i with cooling unit	
27	1	0700 501 031	Output positive cable		
28	1	0700 501 032	Output negative bus bar 01	Only for EM401i with cooling unit	
	1	0700 020 044		Only for EM501i with cooling unit	
29	1	0700 501 034	Output negative bus bar 02		
30	1	0700 501 033	Output negative bus bar 03		
31	6	0700 020 049	Bus bar at diode 01		
32	3	0700 020 050	Bus bar at diode 02		
33	1		Thermal compound	≥2.6	
34	4		Thermal compound	=1.0	
35	3	0700 020 046	NTC thermistor with harness		
36	8		Philips head screw for display board	M3×8	
37	9		Counter sunk philips head screw for display panel	M3×8	
38	5		Philips head screw for control board	M3×8	
39	4		Philips head screw for connector	ST3.5×9.5	
40	8		Philips head screw for transformer	M5×12	
41	2		Philips head screw for inductor	M8×25	
42	2		Anti-skid nut for item 16	M4	
43	4		Anti-skid nut for item 15	M5	
44	8		Philips head screw for fan	M4×45	
45	16		Philips head screw for items 6, 7, 9 and 10	M3×8	

 © ESAB AB 2026

Item	Qty	Ordering no.	Denomination	Notes	Component designation
46	6		Philips head screw for items 14 and 18	M5×12	
47	8		Cross slotted screw for power board	M5×12	
48	9		Philips head screw for item 8	M4×12	
49	6		Cross slotted screw for secondary rectifier diode	M6×16	
50	7		Hexagon head screw for items 13, 26, 27, 28, 29 and 30	M10×25	
51	1	0700 501 041	Wire harness	001–018	
52	1	0700 501 042	Harness kit number 1	Harness no. 1, 2, 12, 14, 15, 18	
53	1	0700 501 043	Harness kit number 2	Harness no. 3	
54	1	0700 501 044	Harness kit number 3	Harness no. 4, 5, 6, 8, 9, 10, 13	
55	1	0700 501 045	Harness kit number 4	Harness no. 11	
56	1	0700 501 046	Harness kit number 5	Harness no. 7	
57	1	0700 501 047	Harness kit number 6	Harness no. 16, 17	
58	1	0700 501 035	Heatsink for secondary diode module	Only for EM401i with cooling unit	
	1	0700 020 097		Only for EM501i with cooling unit	
59	1	0700 020 098	Heatsink for main power board		
60		0700 501 036	Heatsink for input rectifier		

Spare part kit

Item	Qty	Ordering no.	Denomination	Notes	Package includes
201	1	0700 020 074	Main power board with IGBTs	Only for EM 401i with cooling unit/401i	• Main power board • IGBT • Thermal compound with MSDS safety datasheet • Service instruction/procedure • Fasteners (see item no 47)
	1	0700 020 021		Only for EM 501i with cooling unit	
202	1	0700 020 026	Secondary rectifier diode	400 V / 2×200 A	• Secondary rectifier diode • Thermal compound with MSDS safety datasheet • Service instruction/procedure • Fasteners (see item no 49)
203	1	0700 020 027	Input rectifier	1600 V / 100 A	• Thermal compound with MSDS safety datasheet • Service instruction/procedure • Fasteners (see item no 46)

 © ESAB AB 2026

Wire Harness kit

Kit no.	Harness no.	From	To
1	18	Terminal block: (4/5/6)	Mains switch: 1/3/5
	14	Mains switch: 2/4/6	Input EMC board (2AP1): CON1/CON2/CON3
	1	Input EMC board (2AP1): CON4/CON5/CON6	Main control board (20AP1): J8
			Input harmonic inductor (2L2): 1/3/5
	15	Input EMC board (2AP1): CON8	Input rectifier (15BR1): ~
	12	Input rectifier (15BR1): +/-	Capacitor board (15AP3): CON1/CON2
	2	Input rectifier (15BR1): +/-	Main power board (15AP1): CON8 (+BUS)/CON9 (-BUS)
2	3	Inductor (15L1): L-OUT	OKC output terminals: OUT+
3	4	Main control board (20AP1): J10	Main power board (15AP1): J1
			NTC on the output inductor: NTC-L
	5	Main control board (20AP1): J6	Fan power supply board (15AP2): J12
			NTC on secondary heat sink: NTC-S
	6	Main control board (20AP1): J5	Secondary current sensor (15CS1): Sen-C
	8	Main control board (20AP1): J9	Display board (1AP1): CN2
	9	Main control board (20AP1): J11	Output EMC board(2AP2): J20
	10	Main control board (20AP1): J2	Main/motor control board (20AP2): J2
	13	Main control board (20AP1): J7	Water cooler (AP7): CN1
4	11	Main control board (20AP2): J8	Connector 19 pin assembly (XS1): 11~16 (Item number 22 in Power module)
		Main control board (20AP2): J9	Connector 19 pin assembly (XS1): 1~10 (Item number 22 in Power module)
5	7	Fuse for heating valve: S-FUSE	Heating valve: S-HEAT
6	16	Output EMC board (2AP2): J18-2	Inductor (15L1): L-OUT
	17	Output EMC board (2AP2): J18-3	OKC output terminals: OUT-

 © ESAB AB 2026

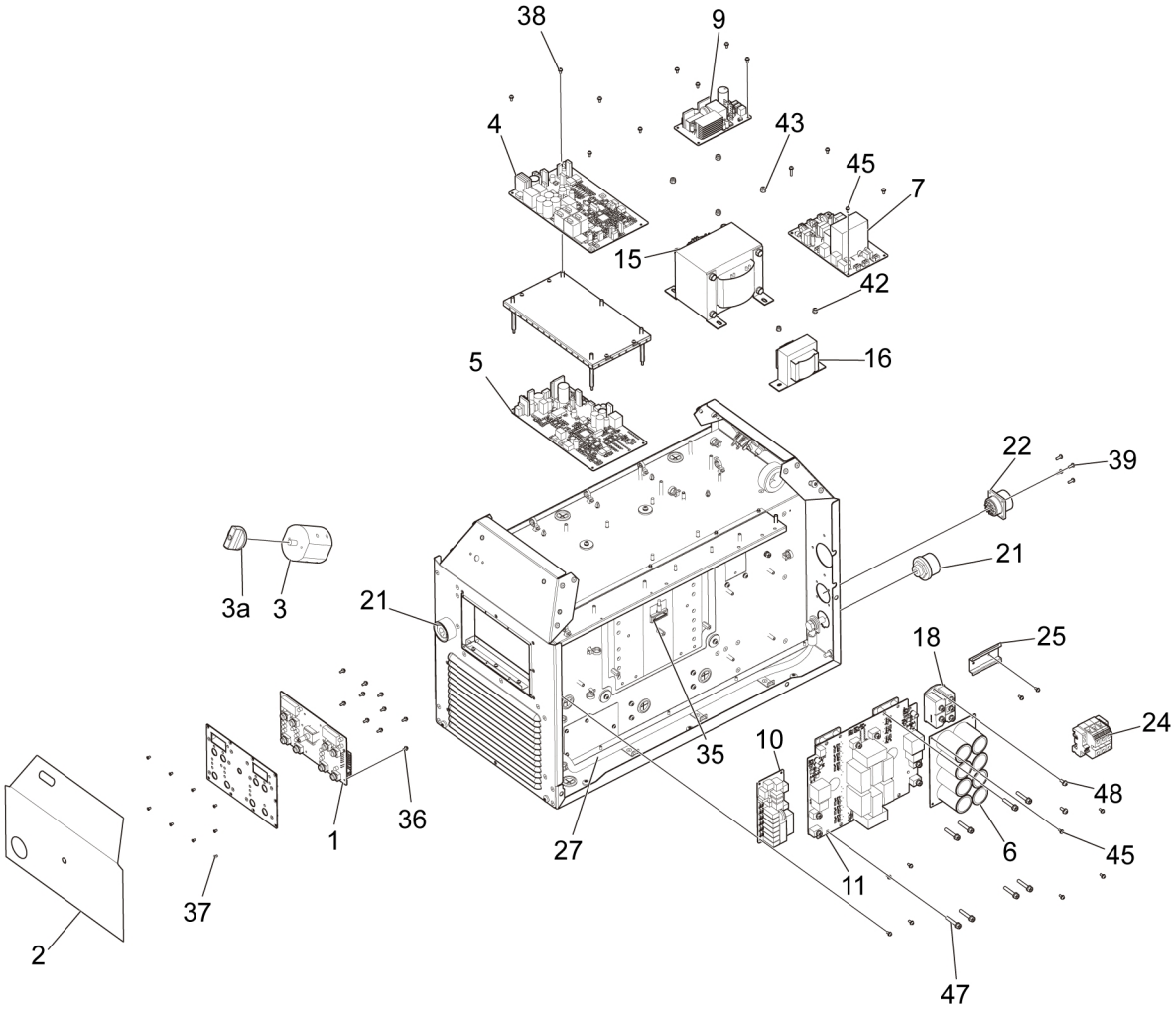
38
9
4
43
45
7
15
42
16
5
22
39
21
3a
3
21
18
25
24
10
35
48
36
1
27
6
45
11
37
2
47

 © ESAB AB 2026

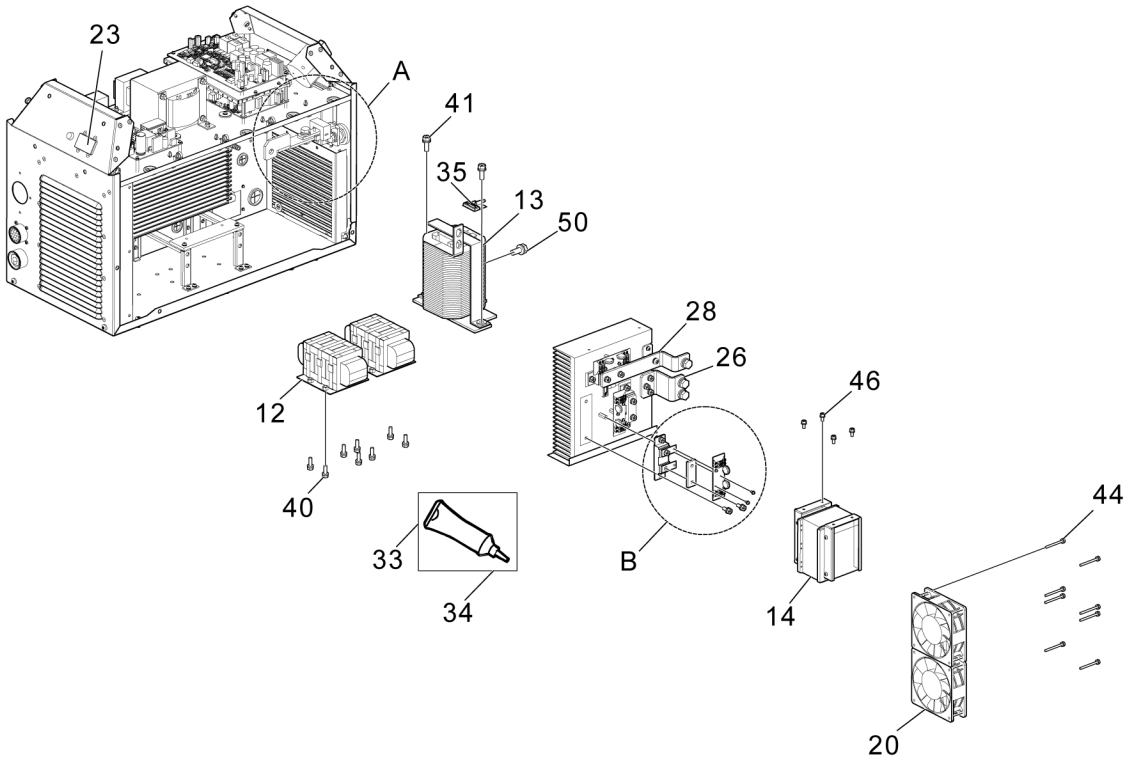

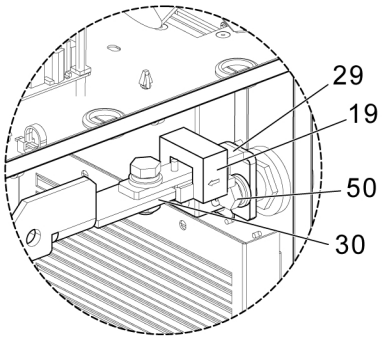

Detail View A

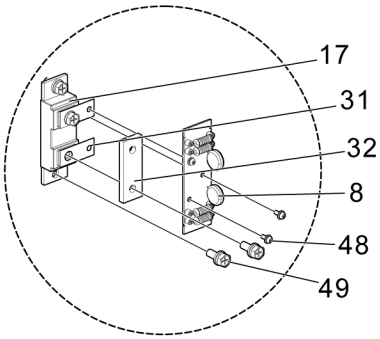

Detail View B

 © ESAB AB 2026

1.3 Cooling unit module

Item	Qty	Ordering no.	Denomination	Notes	Component designation
1	1	0440 021 882	Cooler control board		15AP4
2	1		Cooling unit housing	See *"Cooling unit housing"*, page 16.	
3	1	0462 320 880	Tank complete	Tank with cap and connectors	
4	1	0462 316 880	Fan with contact		
5	1	0465 465 880	Pump	Includes pump and 2 pump fittings	
6	1	0457 987 001	Hose	380 mm, D17/10, to be cut to an applicable length	
7	1	0457 987 001	Hose	380 mm, D17/10, to be cut to an applicable length	
8	1	0457 987 001	Hose	680 mm, D17/10, to be cut to an applicable length	
9	1		Distance screw	M4×12	
10	3	0192 790 104	Spacer	12.7 mm	
11	8		Hose clamp	GER 18.5 mm	
12	2	0446 967 001	Quick coupling		
14	1	0462 314 001	Radiator		
15	4		Screw MRT	M5×12	
16	4		Screw RTS	ST5.5×16	
17	4		Washer	10/5.3×1	
18	4		Nut	M5	
19	1		Sticker cooling liquid	See item 301 in *"Spare part kit"*, page 14.	
20	1		Screw MRT	M4×6	
21	1		Nut M6M	M4	
22	1	0465 462 882	Cooler harness		
24	2		Sealing strip	0.1 m	
25	5	0349 490 195	Bushing		
26	2	0446 416 001	Tank arresting plate		
27	5		Blind rivet countersunk	D4×8	
28	1	0457 987 001	Coolant hose	0.62 m	
29	2	0465 434 001	Hose nipple		

 © ESAB AB 2026

Item	Qty	Ordering no.	Denomination	Notes	Component designation
30	1		Cap black	See item 301 in *"Spare part kit"*, page 14.	
31	1	0349 313 448	Switch plus knob		

Spare part kit

Item	Qty	Ordering no.	Denomination	Notes	Package includes
301	1	0447 044 880	Coolant tank cap kit		• Coolant tank cap, item No. 30 (Qty. 1) • Sticker cooling liquid, Item No. 19 (Qty. 1)

 © ESAB AB 2026

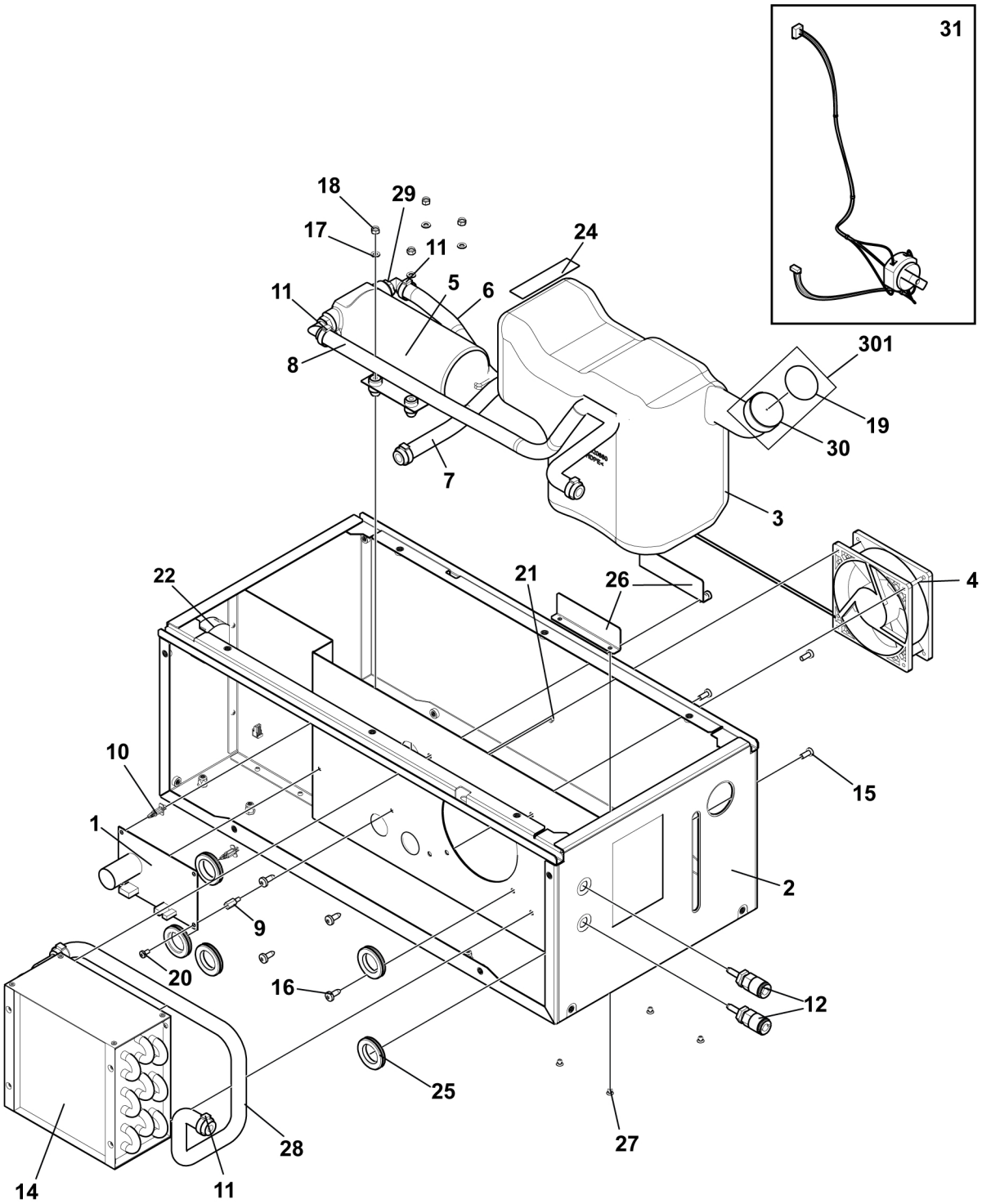
31
18
29
17
11
24
11
5
6
8
301
19
30
7
3
22
21
26
4
10
15
1
2
9
20
16
12
25
28
27
14
11

 © ESAB AB 2026

1.4 Cooling unit housing

Item	Qty	Ordering no.	Denomination	Notes	Component designation
1	2	0465 429 880	Support profile assembly		
2	1	0465 432 002	Intermediate plate		
3	1	0465 458 882	Base frame assembly		
4	22		Blind rivet countersunk	D4×8	
5	1	0446 469 001	Rear panel decal	For 501i and 401i with cooling unit	
	1	0446 469 002	Rear panel decal	For 401i	
8	1	0446 901 001	Front decal	For 501i and 401i with cooling unit	
	1	0446 901 002	Front decal	For 401i	

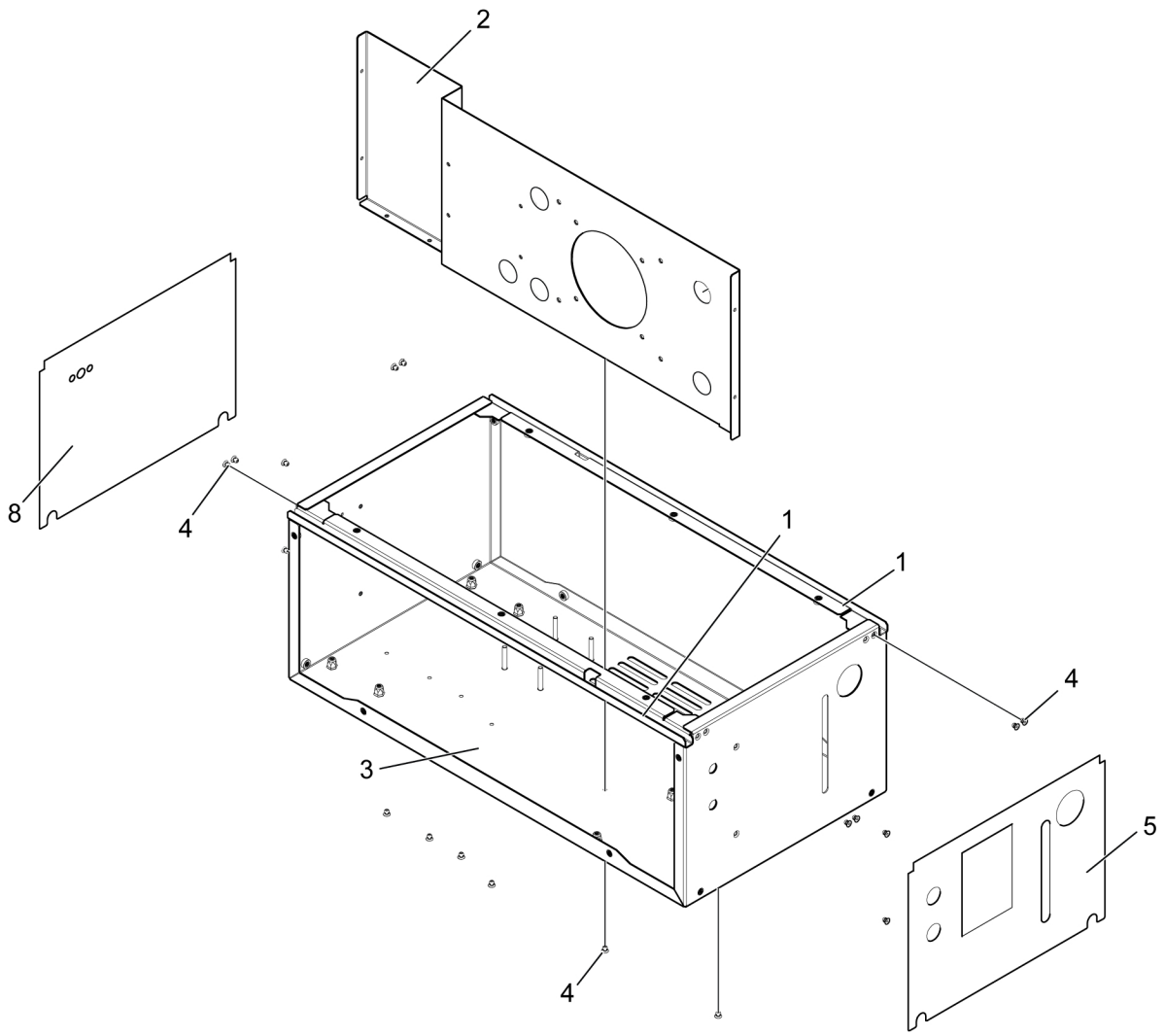

 © ESAB AB 2026

 © ESAB AB 2026

A **WORLD** OF **PRODUCTS** AND **SOLUTIONS.**

For contact information visit esab.com

ESAB AB, Lindholmsallén 9, Box 8004, 402 77 Gothenburg, Sweden, Phone +46 (0) 31 50 90 00

manuals.esab.com